HAKKO

HAKKO FM-204

DESOLDERING TOOL

Desoldering tool

Instruction Manual

●

Thank you for purchasing the HAKKO FM-204 desoldering station.
Please read this manual before operating the HAKKO FM-204.
Please keep this manual readily accessible for reference.

●

⚠ CAUTION
Remove the pump securing screw (M4x25 marked red) from the bottom of the station.
Failure to do so may result in serious problems.

TABLE OF CONTENTS

1. PACKING LIST AND PART NAMES 1
2. SPECIFICATIONS 2
3. WARNINGS, CAUTIONS, NOTES AND EXAMPLES 3
4. INITIAL SETUP 4
5. OPERATION 7
6. PARAMETER SETTINGS 11
7. MAINTENANCE 14
8. ERROR MESSAGES 20
9. TROUBLE SHOOTING GUIDE 21
10. PARTS LIST 23
11. WIRING DIAGRAM 26

1. PACKING LIST AND PART NAMES

Please check to make sure that all items listed below are included in the package.

HAKKO FM-204 desoldering station 1
MODEL FM-2024 desoldering tool 1
Filter pipe assembly (For replacement) 1
Control card 1
Power cord 1
Connecting cable 1
Iron holder with tip cleaner 1
Handle (for gun configuration) 1
Cleaning drill (for heating element) 1
Nozzle remover..... 1
Ceramic paper filter (For replacement/10 pcs.) 1
Tip tray 1
Instruction manual 1

● HAKKO FM-204 desoldering station

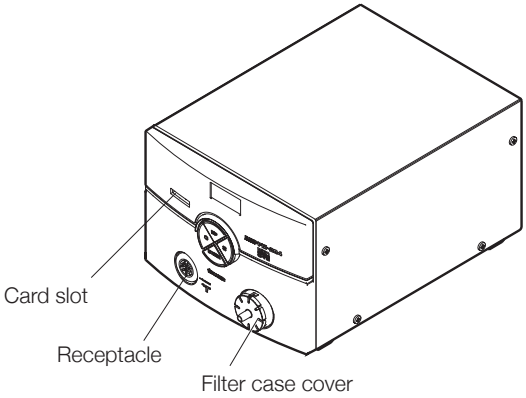

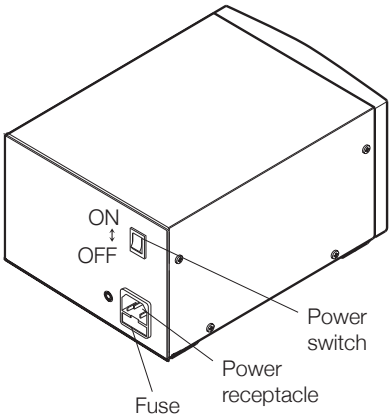

● Accessories

Control card

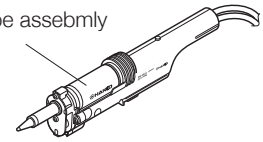

Desoldering tool (Nozzle is not included)

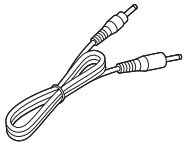

Connecting cable

Handle
(for gun configuration)

Cleaning drill
(for heating element)

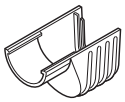

Nozzle remover

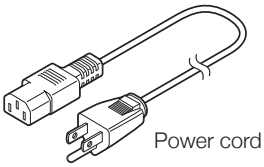

Power cord

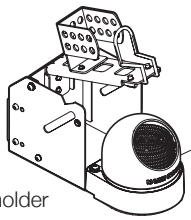

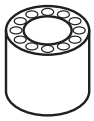

Tip tray

Ceramic paper filter
(10 pcs.)

● Option

HAKKO FM-2027 (FM-2026)

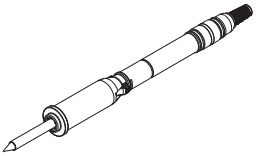

*HAKKO FM-2027 (not included) can be connected to HAKKO FM-204.
When using above FM-2027/FM-2026 soldering iron, please use it with the dedicated iron holder.

● MODEL FM-2024 desoldering tool

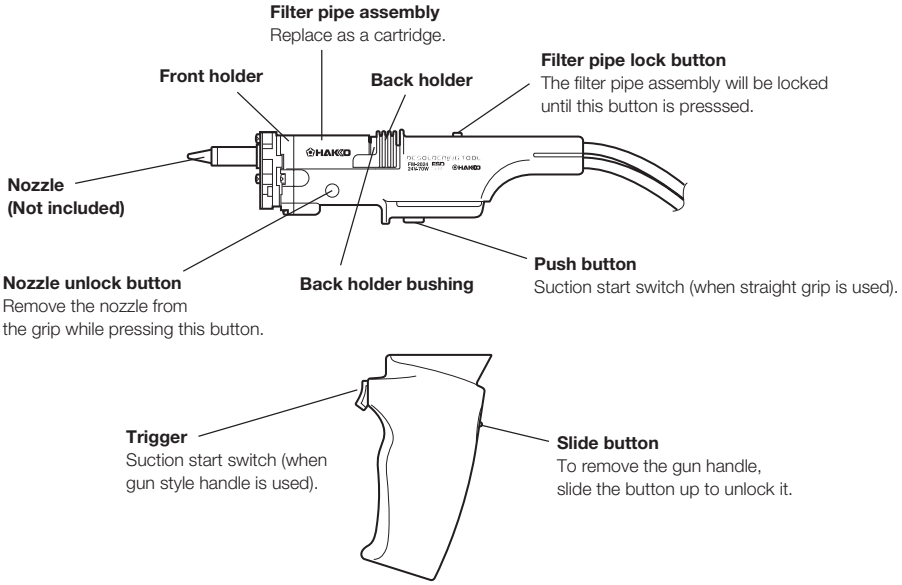

2. SPECIFICATIONS

● HAKKO FM-204 desoldering station

Power Consumption	120 W
Temperature Range	200 to 450ºC (400 to 840ºF)
Temperature Stability	±5°C (±9°F) at idle temperature
Temperature Accuracy	±15°C (±27°F)

● Station

Output	24 V
Dimensions (W x H x D)	160 × 120 × 225 mm (6.3 × 4.7 × 8.9 in)
Weight	3.7 kg (8.1 lb.)
Vacuum Generator	Vacuum pump, double cylinder type
Vacuum Pressure (Max.)	80kpa (600 mm Hg) (24 in. Hg)
Suction Flow	15 ℓ/min.

● HAKKO FM-2027 (Option)

Power Consumption	70 W (24 V)
Tip to Ground Resistance	< 2 Ω
Tip to Ground Potential	< 2 mV
Total Length (w/o cord)	188 mm (7.4 in.) with 2.4D tip
Weight (w/o cord)	30 g (0.067 lb./1.07 oz.)with 2.4D tip
Cord	1.2 m (4 ft)

● MODEL FM-2024 desoldering tool

Power consumption	70 W (24 V)
Temperature range	350 - 450°C (650 - 840°F)
Tip to ground potential	< 2 mV
Tip to ground resistance	< 2 Ω
Length, less cord	180 mm (7.0 in.)
Weight, less cord & hose	65 g (2.3 oz.)
Length of cord	1.2 m (4 ft.)

* The temperatures were measured using the HAKKO FG-101 soldering tester.
* This product is protected against electrostatic discharge.

⚠ CAUTION

■ Handling precautions for ESD Safe products

This product contains electrostatic countermeasures, so please use the following precautions:

1. Not all plastic parts are insulators, they may be conductive. Be careful not to expose live electrical parts or damage insulating materials when performing repairs or replacing parts.
2. Be sure to ground the product before use.

3. WARNINGS, CAUTIONS, NOTES AND EXAMPLES

Warnings, cautions and notes are placed at critical points in this manual to direct the operator's attention to significant items. They are defined as follows:

⚠ **WARNING:** Failure to comply with a WARNING may result in serious injury or death.

⚠ **CAUTION** Failure to comply with a CAUTION may result in injury to the operator, or damage to the items involved. (Two examples are given below.)

NOTE: A NOTE indicates a procedure or point that is important to the process being described.

EXAMPLE: An EXAMPLE is given to demonstrate a particular procedure, point or process.

⚠ WARNING

When power is ON, tip temperatures will be between 350 and 450°C (660 - 840ºF). To avoid injury or damage to personnel and items in the work area, observe the following:

- Do not touch the tip or the metal parts near the tip.
- Do not allow the tip to come close to, or touch, flammable materials.
- Inform others in the area that the unit is hot and should not be touched.
- Turn the power off when not in use, or left unattended.
- Turn the power off when connecting the MODEL FM-2024 or storing the HAKKO FM-204.
- This appliance is not intended for use by persons (including children) with reduced physical, sensory or mental capabilities, or lack of experience and knowledge, unless they have been given supervision or instruction concerning use of the appliance by a person responsible for their safety.
- Children should be supervised to ensure that they do not play with the appliance.

⚠ CAUTION

To prevent accidents or damage to the HAKKO FM-204, be sure to observe the following:

- Do not use the HAKKO FM-204 for applications other than soldering.
- Do not strike the iron against hard objects to remove excess solder. This will damage the iron.
- Do not bend or damage the control card. If the card does become damaged, do not force the card into the station slot.
- Remove power and iron cords by holding the plug – not the wires.
- Do not modify the HAKKO FM-204.
- Use only genuine Hakko replacement parts.
- Do not allow the HAKKO FM-204 to become wet, or use it with wet hands.
- Be sure the work area is well ventilated. Soldering produces smoke.
- While using HAKKO FM-204, don't do anything which may cause bodily harm or physical damage.
- This tool must be placed on its stand when not in use.

4. INITIAL SETUP

A. Iron holder

● **Operation**

First, remove any excess solder from the tip by thrusting the tip into the cleaning wire. (Do not wipe the tip against the wire. This may cause molten solder to spatter.)

1. Insert the holder assembly securely into the Iron holder base.
2. When the wire becomes dirty or loaded with solder, turn the wire until a clean surface is presented.
3. When changing the cleaning wire, lift the case top vertically to prevent solder debris from falling out.

4. Place the spare tips in the tip tray.

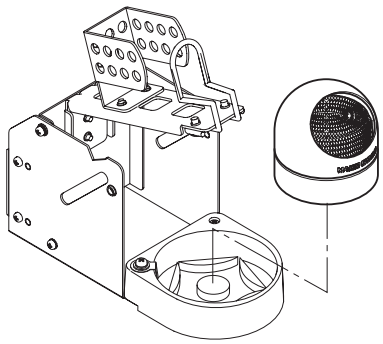

● **Use of the sleep function**

When using the sleep function, insert one end of the connecting cable into the jack at the back of the iron holder and the other end into the jack at the back of the desoldering station to connect them.

> ⚠ **CAUTION**
> - Be sure to turn off the power before connecting or disconnecting the connecting cable.
> - Securely insert the relay cord all the way into the jack.

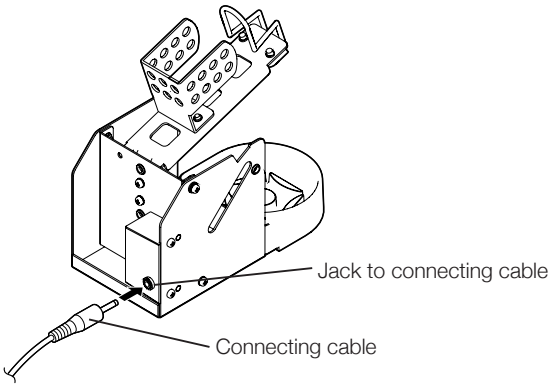

B. MODEL FM-2024

● **Connecting and replacing the filter pipe**

Pull the back holder ⓐ until it locks, then insert the filter pipe assembly with the opening to the nozzle side. Ensure that the outer surface of the filter pipe assembly is even with the handle support. If the filter pipe assembly is tilted, a leak may occur.

To replace the filter pipe assembly, press back holder unlock button ⓑ, pull the back holder to lock it, change the filter pipe assembly, then lock the filter pipe assembly. Replace the filter pipe assembly in the cartridge.

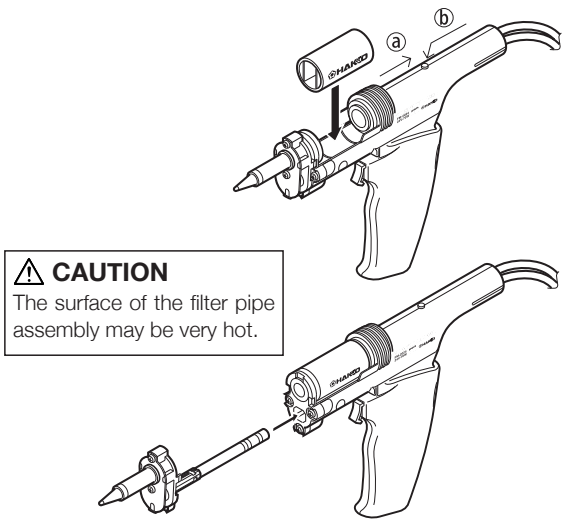

> ⚠ **CAUTION**
> The surface of the filter pipe assembly may be very hot.

4. INITIAL SETUP (cont'd)

● **Attaching and replacing the nozzle cartridge**
Insert the nozzle cartridge fully into the grip as shown in the illustration. Once the nozzle cartridge is inserted, it is locked automatically.

> ⚠ **CAUTION**
> The nozzle can be very hot. To attach or remove the nozzle cartridge, be sure to use the nozzle remover to preclude the possibility of breaking the grip or cartridge.

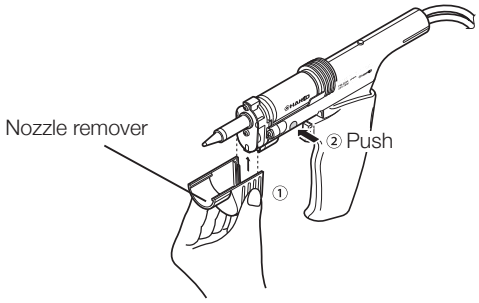

The replace the nozzle cartridge, insert the nozzle remover into the flange of the nozzle cartridge, press the nozzle unlock button **A** and remove the nozzle cartridge.

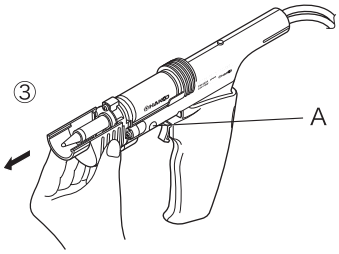

> ⚠ **CAUTION**
> The nozzle may be very hot.

The nozzle remover may be left mounted on the end of the straight grip when not in use to prevent it from being misplaced.

● **Using the desoldering iron in the gun configuration.**
To use the desoldering iron in the gun configuration, attach the handle to the straight grip.

Not sensitive to vertical orientation

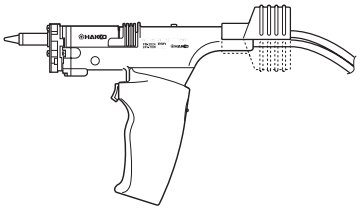

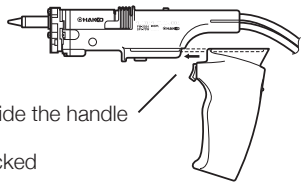

Align the parts and slide the handle toward the front.
The handle will be locked automatically.

● **Using the desoldering iron in the pen configuration.**
To remove the handle, slide down the button located on the rear of the handle to unlock it, then slide the handle toward the back of the MODEL FM-2024.

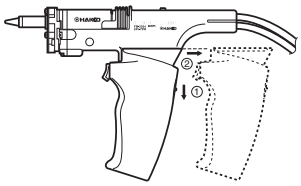

Inserting the tip:

● Holding the front end of the tip, insert it into the sleeve assembly.

> ⚠ **CAUTION**
> Insert the tip into the sleeve assembly until it clicks into place. When you hear it clicks, avoid forcing the tip into the sleeve assembly.

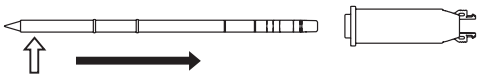

Hold this part to insert the tip into the sleeve assembly.

> ⚠ **CAUTION**
> When holding the head of the tip, there is a danger of burn. Be sure to use the heat-resistant pad.

● Insert the tip securely into the connector.

> **NOTE:**
> Improper insertion of the tip will cause S-E to appear on the display.

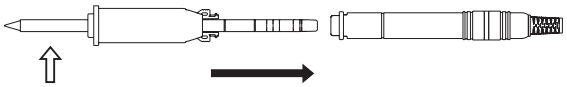

Hold this part to insert the tip into the connector.

C. Desoldering station

⚠ CAUTION
- Be sure to unplug the cord by holding the plug.
- Securely insert the connecting cable all the way into the jack.

● The HAKKO FM-204 detects when the iron is removed from the iron holder and sends this data to the station via the connecting cable. That data is then used for various functions.

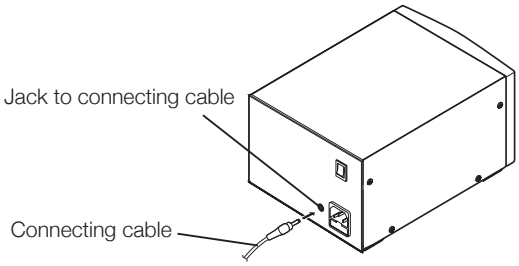

● **Connection**

1. Connect the power cord to the inlet on the rear of the station.
   (Connect the plug from the MODEL FM-2024 to the receptacle on the HAKKO FM-204.)

   NOTE:
   The HAKKO FM-204 can be used without being connected to a control box.

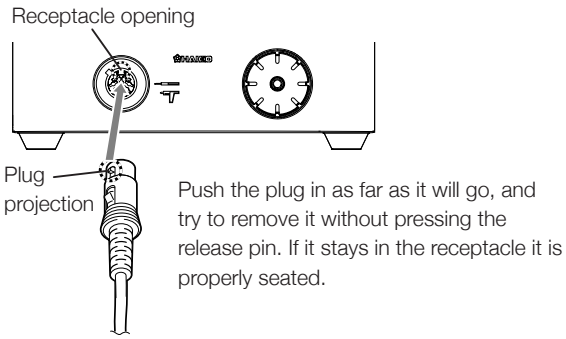

⚠ CAUTION
Connect the plug to the receptacle, aligning the tab on the plug with the opening on the receptacle.

2. Put MODEL FM-2024 into the iron holder.

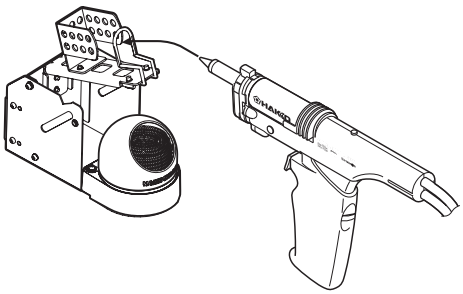

3. Connect the hose from the MODEL FM-2024 to the filter case cover on the HAKKO FM-204 Station.

4. Plug the power cord into a grounded wall socket.
   Ensure that the power switch is OFF before inserting the AC plug.
   Turn the power switches ON.

⚠ CAUTION
Be sure to ground this product as it is ESD safe by design.

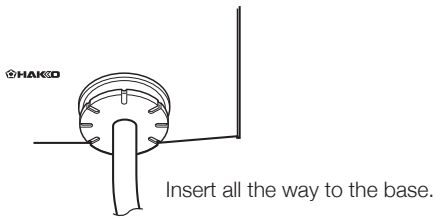

5. Turn ON the power.

⚠ CAUTION
The HAKKO FM-204 does not function properly if the power is turned on with the trigger pressed. Release the trigger and then turn the power ON.

5. OPERATION

Controls and displays

Controls

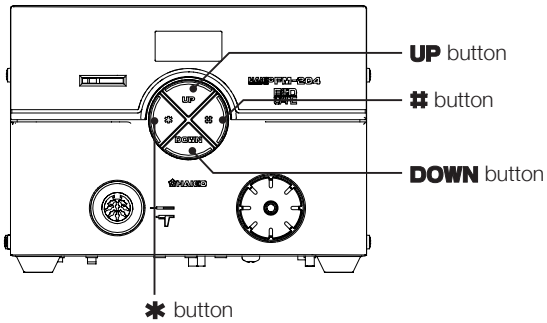

The front panel of the HAKKO FM-204 has four controls.

✱ ..... End of sequence signal (terminates a phase of a data entry mode). When pressed for less than one second, displays settings already stored.
..... Initiates a data entry mode.
UP ..... Increases the displayed value.
DOWN ... Decreases the displayed value.

The HAKKO FM-2027 and the MODEL FM-2024 can be connected to the HAKKO FM-204 Station.

The lamp on the grip operates as follows.
In use ..... Lights
Sleep mode ..... Blinks slowly
Off mode ..... Off
Error ..... Blinks quickly

Displays

The HAKKO FM-204 has a three-digit display element.
Depending on the selected mode, it will display:

- Sensor temperature (of the iron tip)
- Data entry:
  Selected quantity (See the data entry procedures.)
- Temperature scale:
  ºC or ºF, depending on selection
- Error detection (See ERROR MESSAGES.)

An audible buzzer is provided to alert the operator:

- When the station has reached the set temperature, the buzzer will sound once. (Default setting)
- When the low temperature threshold has been crossed, the buzzer will sound continuously. This buzzer will shutoff when the sensed temperature returns to the acceptable range.
- When a foreign substance, an incompatible tip, or the soldering end of the tip is inserted into the HAKKO FM-2027, the display will blink and the buzzer will sound continuously.
- When the auto-power shutoff function is activated and power to the heater is shut off, the buzzer sounds three times.

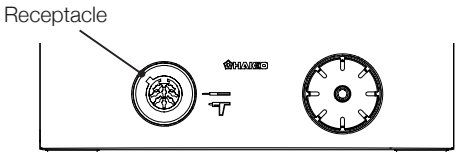

Operation

1. Turn the power switch ON.
2. By default, when the set temperature is reached, the buzzer sounds, indicating that the unit is ready.

   The heater lamp on the front panel starts blinking.

> ⚠ **CAUTION**
> By default, the temperature is set to 350ºC (660ºF).
> You can confirm the set temperature by pressing the ✱ button. The set temperature will be displayed for two seconds.

> ⚠ **CAUTION**
> When not in use, set the iron in the iron holder.

● Changing the temperature setting

• MODEL FM-2024

Temperature setting range
ºC.....350 to 450ºC
ºF .....660 to 840ºF

• HAKKO FM-2027 (Option)

Temperature setting range
ºC.....200 to 450ºC
ºF .....400 to 840ºF

Example: Changing the temperature from 350ºC to 400ºC

1. Insert the control card into the station.

● The hundreds digit of the display begins to flash. This indicates that the unit has entered the temperature setting mode and data may be entered.

2. Enter the hundreds digit.

● Press the **UP** or **DOWN** button to set the hundreds digit. When the desired figure is displayed, press the ✱ button. The tens digit begins to flash.

3. Enter the tens digit.

● Press the **UP** or **DOWN** button to set the tens digit. When the desired figure is displayed, press the ✱ button. The units digit begins to flash.

4. Enter the units digit.

● Set the desired units digit in the same way as for the tens digit, and then press the ✱ button. The temperature is recorded to the internal memory, and heater control begins after the new set temperature is displayed.

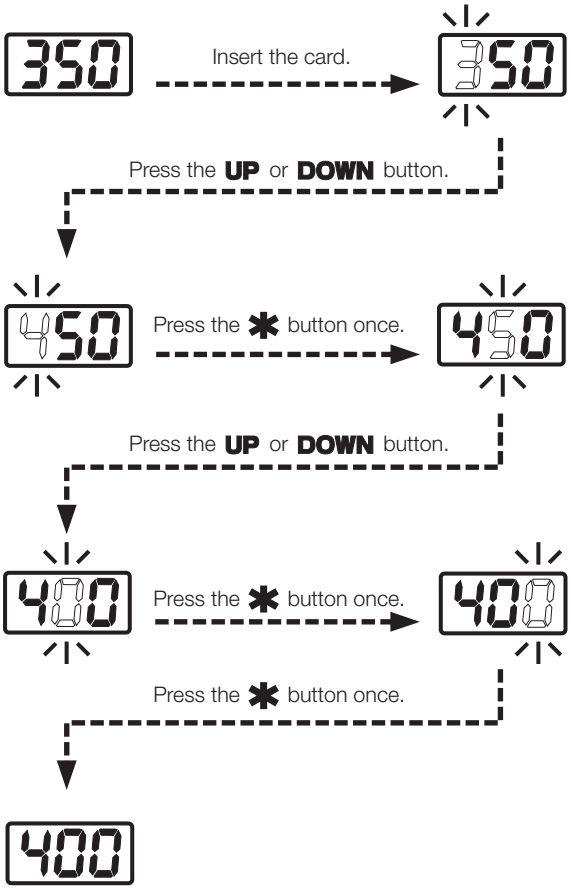

⚠ CAUTION

If the power is turned off without completing the temperature setting, the new set temperature will not be recorded.

To change the set temperature with the control card in the station:

NOTE:

If you enter a value outside the temperature setting range (see the table above), the display returns to the hundreds digit, and you have to enter a correct value.

1. Press and hold the ✱ button for at least one second. The current temperature setting is displayed, and then the hundreds digit begins to flash one second later. This indicates that the station has entered the temperature setting mode.
   Follow steps 3 to 4 on “Changing the temperature”.
2. If the ✱ button is not pressed and held for at least one second, the current set temperature is displayed, and then the tip temperature is displayed.

The temperature accuracy of iron tips is ±15°C (±27°F) (except for designated tips) when using the default offset values. If a higher temperature accuracy is required, use the following offset function:

● Entering the tip offset value

Example:

When the set temperature is 400°C and the actual tip temperature is 410°C: The difference in temperature is 10°C, so enter –10 as the current offset value.

1. Insert the control card into the station.

● The station enters the temperature setting mode.

2. Press the # button.

● The station enters the offset entry mode. Press the **UP** or **DOWN** button to set the hundreds digit.
The values that can be entered in °C or °F are 0 (for positive values) and - (for negative values).

3. Select 000 or -00 and press the ✱ button.

The tens digit begins to flash. Enter the offset value.
The values that can be entered to the tens digit are 0 to 5 in °C (0 to 9 in °F).
The tens and units digits are set with the offset value range.

Allowable offset value range
°C..... –50 to +50°C
°F ..... –90 to +90°F

If you enter a value outside the allowable offset value range, the display returns to the hundreds digit, and you have to enter a correct value.

⚠ CAUTION
In the offset entry mode (when the display is flashing), the tip temperature is controlled by the current offset value.

4. Verify the tip temperature.

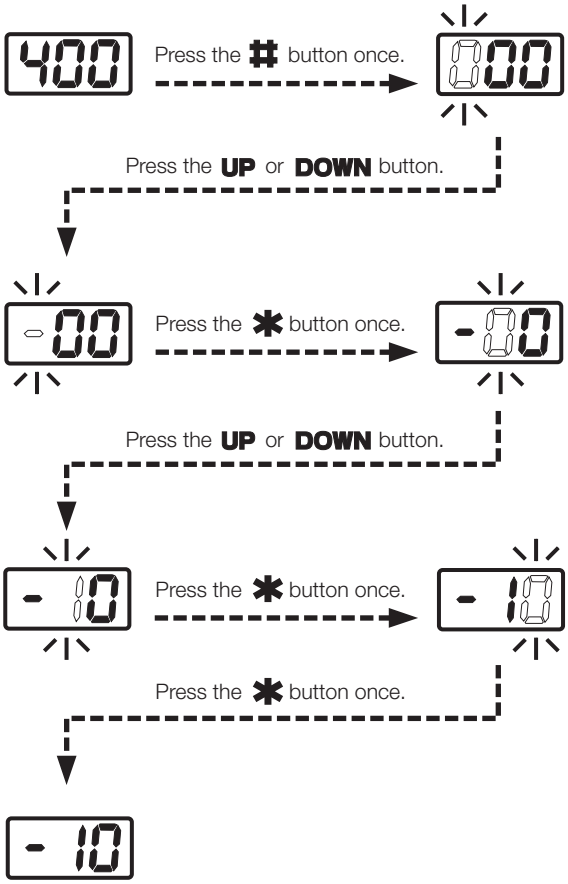

NOTE:
The station stores the offset values for each tip type.
For example, connect the HAKKO FM-2027 to the station and enter the offset value (–10°C). Next, change to the MODEL FM-2024 and enter the offset value –20°C). When you reconnect the HAKKO FM-2027, the offset value is set to –10°C automatically.

To change the offset value with the control card in the station:

1. **Press and hold the # button for at least one second.**
   The current offset value is displayed, and then the hundreds digit begins to flash one second later. This indicates that the station has entered the offset entry mode. Follow steps 3 and 4 for setting the offset value of the tip temperature.

2. **If the # button is not pressed and held for at least one second, the current OFF set value is displayed, and then the temperature setting is displayed.**

● Removing solder

Clean the nozzle tip.

Be sure the nozzle tip is tinned with clean, fresh solder.

If the nozzle tip is coated with oxidation or contamination, its thermal conductivity deteriorates. In contrast, if the nozzle end is wetted with a small amount of clean solder, its thermal conductivity increases.

1. **Melt the solder.**
   Position the nozzle above the lead to be desoldered as shown in the illustration and melt the solder.

⚠ CAUTION
Never allow the nozzle to touch the board itself.

Confirm that the solder is melted.

⚠ CAUTION
To confirm that all solder is melted, observe the inside of the hole and the backside of the P.W.B. If this is difficult to do, try slowly moving the lead with the nozzle. If the lead moves, the solder is melted. Never move the lead by force. If it doesn't move easily, the solder isn't yet fully melted.

2. **Extract the solder.**
   After confirming that the solder is completely melted, extract the solder by pressing the button (or squeezing the trigger).

⚠ CAUTION
Never leave any solder remaining inside the hole in the P.W.B.

3. **Problems during desoldering.**
   If solder remains, resolder the component and repeat the desoldering process.

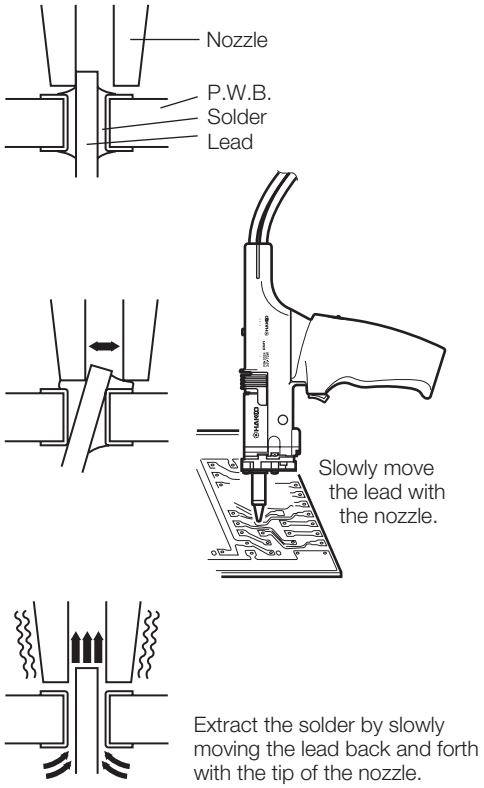

6. PARAMETER SETTINGS

● Parameter entry mode process

Select the parameter entry mode using the following operation.
Be sure to insert the control card before opening.

① Turn the power on while pressing the **UP** button.

The station enters the parameter entry mode.

② Select the parameter number.

[01] is initially displayed, and the tens digit begins to flash. Use the ✱ and **UP** buttons to change the parameter setting, or press the **DOWN** button to select the units digit.
Press the ✱ button to go to the next step.

③ Select the number for setting the parameter setting set in the preceding step.

The current setting is initially displayed.
Use the ✱, **UP**, **DOWN** or button to enter the parameter setting.
Press the ✱ button to return to step ②.

After the necessary parameters are set, press and hold the ✱ button in steps ② or ③ above for two seconds.

④ The display changes to [--y], and the station asks whether to exit the parameter entry mode.
Select [--y] and press the ✱ button to exit the parameter entry mode.

The HAKKO FM-204 has the following parameters.

	Number	LED display	Setting	Default setting
Temperature display	01	[F] or [C]	F: °F display C: °C display	°F display
Auto sleep time setting	02	Tens digit entry	Sleep time	6 min.
Low temperature error setting	03	Hundreds digit entry	Low temperature threshold entry	270°F
Offset-free mode	04	[0] or [1]	0:Off 1: On	Off (0)
Buzzer setting (C-E sound, S-E sound)	05	[0] or [1]	0:Off 1: On	On (1)
Buzzer setting (Set temperature alert)	06	[0] or [1]	0:Off 1: On	On (1)
Auto sleep on/off setting	07	[0] or [1]	0:Off 1: On	On (1)
Auto shutoff on/off setting	08	[0] or [1]	0:Off 1: On	Off (0)

NOTE:
- Each time the **UP** or **DOWN** button is pressed, the display toggles between the following displays: [--y] and [--n].
- When [--n] is selected, the parameter number selection screen in step 2 is displayed.

⚠ CAUTION
Do not leave the HAKKO FM-204 for a long time with the auto shutoff function activated. Turn the power off when you do not use the HAKKO FM-204 for a long time.

● 01: Temperature display (°C or °F)

- When the display changes to [F] and [C], the station enters the mode for changing the temperature display.
- Press the **UP** or **DOWN** button to switch the display alternately between [F] (Fahrenheit) and [C] (Celsius).

● 02 : Auto sleep time setting

Set the time until the auto sleep function activates after the soldering iron is set on the iron holder.

Auto sleep examples:

00	Sleep (immediately after the iron is set on the iron holder)
10	Sleep (10 minutes after the iron is set on the iron holder)

NOTE:
- The auto sleep time can be set in units of minutes (up to 29 minutes).

- The tip temperature is reduced to approximately 200ºC (400ºF) during sleep mode. The tip temperature varies significantly, depending on the ambient environment, tip type and iron types. 200ºC (400ºF) should only be used as a guide.
- When the display is SLP, press the **UP** or **DOWN** button, or remove the soldering iron from the iron holder to resume power to the heater.

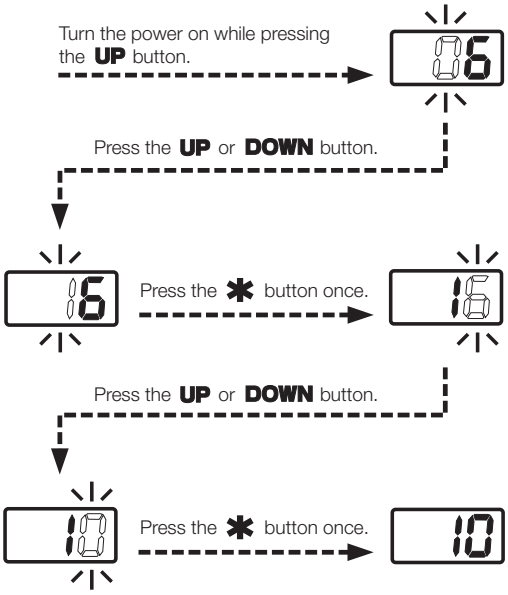

⚠ CAUTION
- When the setting temperature is 300ºC (570ºF) or less, the sleep function cannot be set to Sleep even if the sleep function is set to ON.
- The tip temperature rises to the setting temperature once at power on even if the sleep time is set to "0". The tip temperature will be reduced to the sleep temperature after the temperature reaches the set temperature.

● 03 : Lower temperature error setting

Lower temperature error

- When the temperature drops below a set limit, an error is displayed and the buzzer sounds.
- When the temperature returns within the allowable range, the buzzer stops.

Low temperature setting range
for Celsius: 30 to 150ºC
for Fahrenheit: 50 to 270ºF

Example:

When the set temperature is 350ºC and the low temperature error setting is 100ºC, a warning buzzer sounds when the temperature drops to 250ºC.

- The hundreds digit begins to flash when entering the low temperature setting.
  Use the method for setting the temperature to enter and set the low temperature setting.
- If you enter a value outside the low temperature setting range (see the table on the left), the display returns to the hundreds digit, and you have to enter a correct value.
- After the low temperature setting is set, the display returns to the parameter number selection screen.

● 04 : Offset-free mode

● When the station is in the offset-free mode, either 0 or 1 is displayed.

0 : The offset value cannot be entered without the control card inserted into the station.

1 : The offset value can be entered without the control card inserted into the station.

Select **UP** or **DOWN** and press the ✱ button.

● 05 : S-E, C-E buzzer sound setting mode

● In the buzzer sound setting mode, which sets whether to sound the buzzer when a sensor error or soldering iron error occurs, either 0 or 1 is displayed.

0 : The buzzer does not sound.

1 : The buzzer sounds.

Select **UP** or **DOWN** and press the ✱ button.

● 06 : Set temperature alert setting mode

● In the set temperature alert setting mode, either 0 or 1 is displayed.

0 : The buzzer does not sound when the soldering iron reaches the set temperature.

1 : The buzzer sounds when the soldering iron reaches the set temperature.

Select **UP** or **DOWN** and press the ✱ button.

● 07 : Auto sleep function setting mode

NOTE:
When the auto sleep function is on, removing the iron from the iron holder or pressing the **UP** or **DOWN** button resumes operations.

● In the auto sleep setting mode, either 0 or 1 is displayed.

0 : The auto sleep function is off, regardless of the auto sleep set time.

1 : The auto sleep function is on, and the auto sleep time is activated.

Select **UP** or **DOWN** and press the ✱ button.

● 08 : Auto shutoff function setting mode

When the soldering iron is set on the iron holder and is not operated for 30 minutes, power to the heater is shut off automatically, and the unit shuts off.
When the auto shutoff function is on, removing the iron from the iron holder or pressing the **UP** or **DOWN** button resumes operation.
When auto shut-off is activated, the buzzer sounds, and it sounds again in 30 minutes.

● In the auto shutoff setting mode, either 0 or 1 is displayed.

0 : The auto shutoff function is turned off.

1 : The auto shutoff function is turned on.

Select **UP** or **DOWN** and press the ✱ button.

7. MAINTENANCE

Properly maintained, the MODEL FM-2024 desoldering tool should provide years of good service. Efficient desoldering depends upon the temperature, and the quality and quantity of the solder and flux. Perform the following service procedures as dictated by the conditions of the gun's usage.

⚠ WARNING

Since the desoldering tool can reach a very high temperature, please work carefully. Except when cleaning the nozzle and heating element, ALWAYS turn the power switch OFF and disconnect the power plug before performing any maintenance procedure.

Maintenance of nozzle

⚠ CAUTION
The desoldering tool may be extremely hot. During maintenance, please work carefully.

Inspect and clean the nozzle

- Plug in the power cord, turn the power switch ON and let the nozzle heat up.

⚠ CAUTION
The cleaning pin will not pass through the nozzle until the solder inside the nozzle is completely melted.

- Clean out the hole of the nozzle with the nozzle cleaning pin (not included as a standard accessories).
- If the cleaning pin does not pass through the hole in the nozzle, clean with the cleaning drill (not included as a standard accessories).
- Check the condition of the solder plating on the nozzle tip.
- Check visually if the nozzle was eroded.

⚠ CAUTION
The inside hole and the surface of the nozzle is plated with a special alloy. Should this alloy become eroded by high-temperature solder, the nozzle will not be able to maintain the proper temperature.

- If the nozzle is still in a good condition, put some fresh solder on the nozzle tip to protect solder plated area from oxidation.

Cleaning with the nozzle cleaning pin

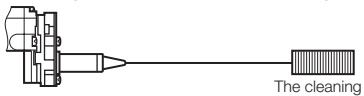

The cleaning pin passes completely through the hole.

Cleaning with the cleaning drill

● Before cleaning

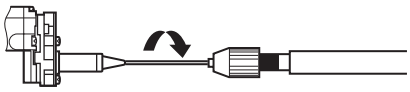

● After cleaning

Insert the bit while turning it clockwise.

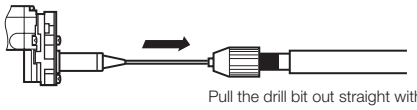

Pull the drill bit out straight without turning it.

⚠ CAUTION
If the cleaning drill is forced into the nozzle, the drill bit could break or be damaged.
Please use the proper size cleaning pin or cleaning drill for the nozzle diameter.

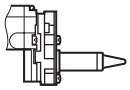

Solder plating

- If the cleaning pin and cleaning drill do not pass through the hole in the nozzle, replace the nozzle.
- If the solder plating on the nozzle tip is worn, replace the nozzle.
- If the inside hole of the nozzle is eroded, replace the nozzle.

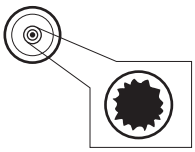

Hole is damaged by erosion.

NOTE:
Unfortunately, it is often difficult to observe this condition. Therefore, if desoldering efficiency goes down and all other parts appear to be OK, the nozzle is probably eroded and should be replaced.

Cleaning the inside of suction pipe

Move the nozzle cartridge to the cleaning position indicated in figure at right. Change the position of the nozzle cartridge before turning the power ON, to prevent accidents.

To clean the inside of the suction pipe, ensure that the solder remaining in the pipe has been completely melted.

For the cleaning of the suction pipe, set the nozzle temperature to 400°C/750°F or higher. Start this cleaning after the set temperature has been reached.

To clean the inside of the suction pipe, insert the cleaning drill fully into the suction pipe while turning it clockwise. Then remove the accumulated debris.

⚠ CAUTION
First remove the nozzle from the grip while pressing the nozzle unlock button, then insert the nozzle as shown.

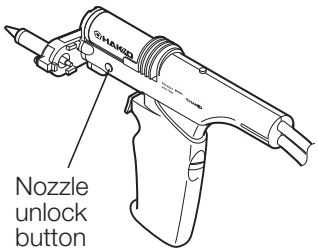

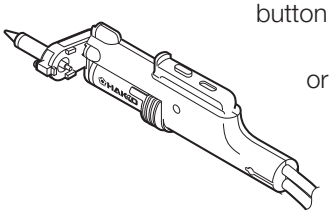

or

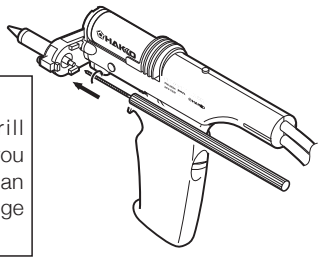

⚠ CAUTION
If you insert the drill without turning it or if you try to insert the drill at an angle, the nozzle cartridge may be broken.

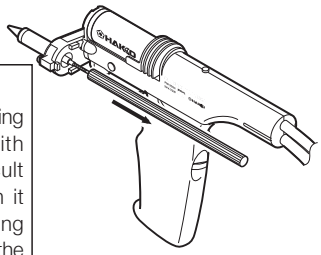

⚠ CAUTION
When removing the cleaning drill, keep it parallel with the nozzle. If it is difficult to remove the drill, turn it slightly whilst withdrawing it. If you forcibly remove the drill, the cartridge may be broken.

Check and clean the front and back holder bushings

If foreign matter gets stuck on the contact surface between the front holder and the filter pipe assembly, or between the back rubber holder bushing and the filter pipe assembly, air will be sucked into the tool, preventing normal desoldering. Remove the solder and flux adhering to the surface of front holder ⓐ and back holder ⓑ then connect the filter pipe assembly.

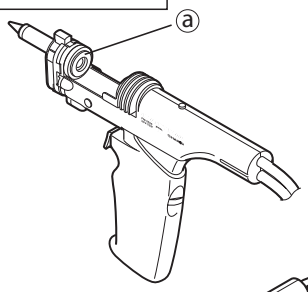

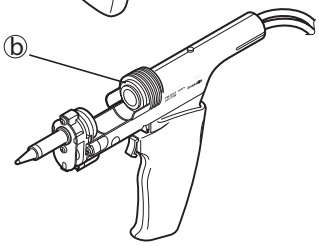

Checking and replacing the ceramic paper filter

1. Turn the filter case cover on the HAKKO FM-204 station counterclockwise to unlock it, then remove the cover by pulling it straight out.

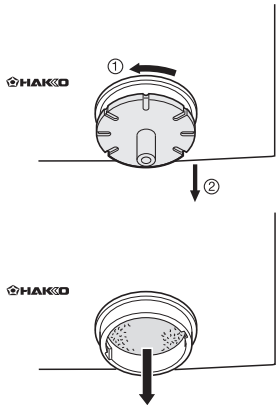

The filter is clogged with hardened flux.

2. Replace the ceramic paper filter.

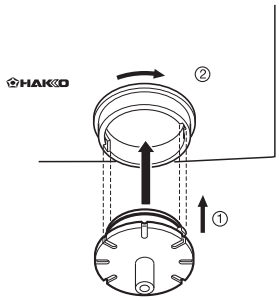

Fit the filter case cover in place.

3. After replacing the ceramic paper filter, press the filter case cover with its tabs inserted into the corresponding slots in the filter case then turn clockwise to lock it.

Cleaning the pump

⚠ WARNING

Unplug the power cord before cleaning the pump.

NOTE:
Consistent replacement of dirty/clogged ceramic filters will reduce or eliminate the need to clean the pump.

1) Disassembly

1. Remove the screws (8) used to secure the cover, and remove the cover.

2. Remove the screws (4) used to secure the pump assembly.

3. Remove the inner hose and pump head (at two locations).

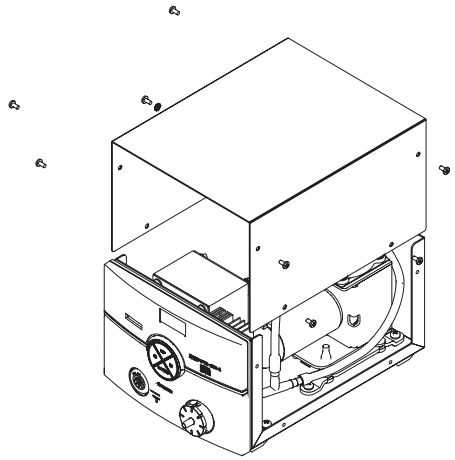

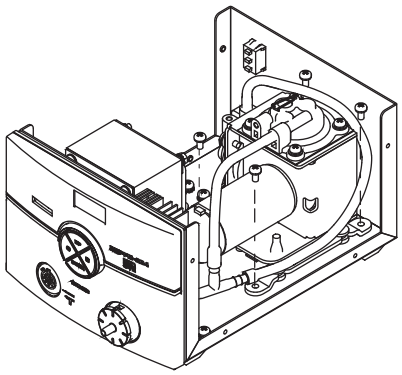

2) Cleaning the pump head

- Remove the valve and guard, and clean away any adhering flux.

⚠ CAUTION
If the guard is difficult to remove, heat it with warm air. Do not try to force it off using a screwdriver or other tool.This may deform the guard and reduce its air leakage efficiency.

⚠ CAUTION
Clean with alcohol or thinner.

NOTE:
- Replace the valve if it is deformed or has calcification.
- Replace the exhaust filter if dirty.

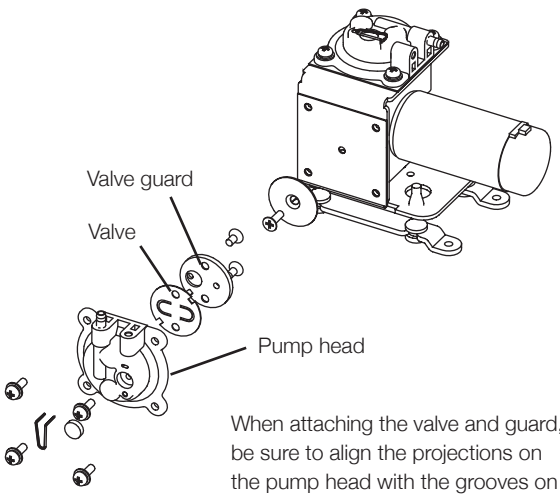

When attaching the valve and guard, be sure to align the projections on the pump head with the grooves on the valve and guard.

3) Assembly

- Attach the valve and guard.

⚠ CAUTION
When assembling the pump, be sure that it is airproof and that there are no air leaks.

● Checking procedure

⚠ WARNING

Unless otherwise specified, perform the following steps after turning the power switch OFF and disconnecting the AC plug.

■ Checking the cord assembly

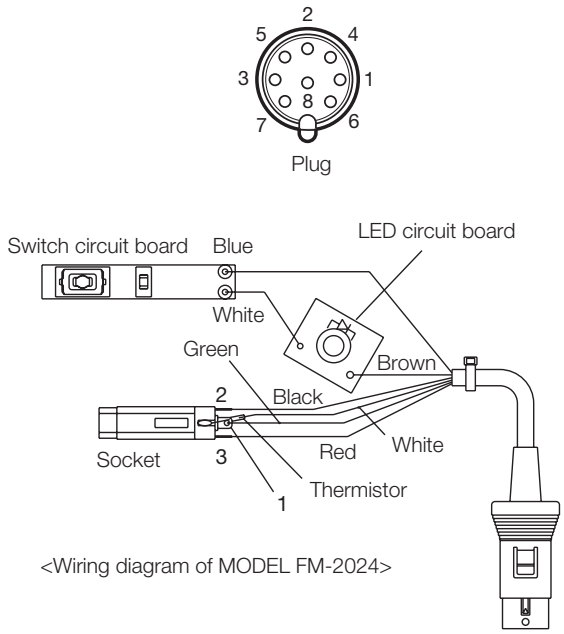

<Wiring diagram of MODEL FM-2024>

Checking the electrical continuity of the cord assembly

1. Remove the plug of the cord assembly from the station.
2. If the handle is attached, remove it.
3. Remove the nozzle cartridge. For this removal, see “Attaching and replacing the nozzle cartridge.”
4. Remove the screws for the grip and measure the resistance between the socket terminal and the connector pin as shown below (refer to the wiring diagram).

   Plug 1 ..... Red (socket) 3
   Plug 2 ..... Green (socket) 1
   Plug 3 ..... Black (socket) 2
   Plug 4 ..... Brown (LED circuit board)
   Plug 5 ..... White (thermistor)
   Plug 6 ..... Blue (switch circuit board)

If the resistance is larger than 0 Ω or ∞ in any location, replace the cord assembly.

■ Checking the grounding line

1. Measure the resistance between plug pin 2 and the nozzle end.
2. If the resistance value exceeds 2 Ω (at room temperature), perform the maintenance for the tip, which is described in the next page. If this does not decrease the value, check the electrical continuity of the cord assembly.

■ Maintenance

This procedure, if followed daily, will materially add to tip life.

a. Set the temperature to 250°C (482°F).
b. When the temperature stabilizes, clean the tip and check the condition of the tip. If the tip is badly worn or deformed, replace it.
c. If the solder plated part of the tip is covered with black oxide, apply fresh solder, containing flux, and clean the tip again. Repeat until all the oxide is removed, then coat the tip with fresh solder.

> ⚠ **CAUTION**
> NEVER file the tip to remove oxides!

d. Turn the power OFF and remove the tip, using the heat resistant pad. Set the tip aside to cool.
e. Remaining oxides, such as the yellow discoloration on the tip shaft, are not harmful but, can be removed with isopropyl alcohol.

■ Checking the heater/sensor

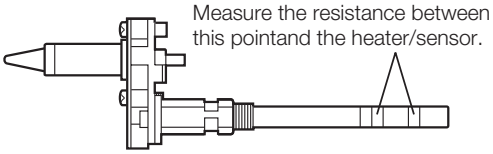

Measure the resistance at room temperature (15 to 25°C ; 59 to 77°F). The normal range is 8 Ω ±10%. If the resistance is outside this range, replace the nozzle assembly.

8. ERROR MESSAGES

● Sensor Error

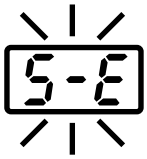

When there is the possibility that a failure has occurred in the sensor or heater (including the sensor circuit), S-E is displayed and the power is shut down.

NOTE:
The sensor error also occurs if the tip is not inserted properly.
When a grip is connected, S-E may be displayed momentarily. This does not indicate a malfunction.

● Low-temperature alarm tolerance error

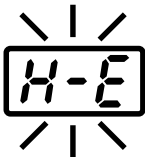

If the sensor temperature falls below the difference between the current temperature setting and the low-temperature alarm tolerance, H-E is displayed and the warning buzzer sounds. When the tip temperature rises to a value within the set tolerance, the buzzer will stop sounding.

EXAMPLE:

350°C (400°C – 50°C)

Set temperature — Low-temperature alarm tolerance

OR

650°F (750°F – 100°F)

Set temperature — Low-temperature alarm tolerance

EXAMPLE:
Assume that the temperature setting is 400°C/750°F and the tolerance 50°C/100°F. If the temperature continues to decrease and finally falls below the value indicated below while the heating element is on, the displayed value starts blinking to indicate that the tip temperature has dropped.

● Heater terminal short circuit error

HSE will flash, and the buzzer will sound continuously, when the tip is inserted incorrectly, an incompatible tip is inserted, or a foreign object has found its way into the connector.

● Soldering iron error

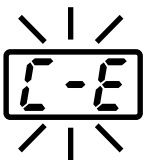

C-E will be displayed if the connector cord is not attached to the station or the wrong soldering iron is connected.

9. TROUBLE SHOOTING GUIDE

⚠ WARNING

To check inside or replace parts, be sure to turn the power switch OFF and remove the AC plug to avoid electric shock.

- **No operation occurs when the power switch is turned ON.**

  CHECK : Is the power cord connected properly?
  ACTION : Properly connect the power cable.
  CHECK : Is the fuse blown out?
  ACTION : Investigate why the fuse blew and then replace the fuse. If the cause can not be determined, replace the fuse. (e.g., short-circuit in the desoldering iron)

- **When the power switch is turned ON, soldering iron error is displayed.**

  CHECK : Is MODEL FM-2024 connected?
  ACTION : Connect MODEL FM-2024.
  CHECK : Is the cord assembly connected properly?
  ACTION : Connect again while referring to “INITIAL SETUP”.
  CHECK : Is the cord assembly broken?
  ACTION : Refer to “Checking the electrical continuity of the cord assembly” in Maintenance.

- **The nozzle is not heated.**

  CHECK : Is the nozzle cartridge fully inserted?
  ACTION : Fully insert the nozzle cartridge.
  CHECK : Is the cord assembly broken? Is the heater/sensor disconnected?
  ACTION : Refer to “Checking the electrical continuity of the cord assembly” and “Checking the heater/ sensor” in Maintenance.

- **The nozzle end does not extract solder.**

  CHECK : Is the set temperature for the nozzle too high?
  ACTION : Set the nozzle temperature at the appropriate level.
  CHECK : Is the nozzle end plugged or coated with oxide?
  ACTION : Remove the oxide by cleaning the nozzle end with cleaning sponge or tip cleaner.
  CHECK : Has the nozzle end deteriorated due to corrosion?
  ACTION : Replace the nozzle.

- **The tip temperature is too high.**

  CHECK : Is the connection cord broken?
  ACTION : See “Checking the electrical continuity of the cord assembly”.

- **The tip temperature is too low.**

  CHECK : Is the nozzle end plugged or coated with oxide?
  ACTION : Remove the oxide by cleaning the nozzle end with HAKKO 599B Tip cleaner.
  CHECK : Has the nozzle end deteriorated due to corrosion?
  ACTION : Replace the nozzle.
  CHECK : Verify the tip offset value is correct.
  ACTION : Enter the correct value.

- **The low-temperature alarm tolerance error [H-E] occurs frequently.**

CHECK : Is the setting value for the low-temperature alarm tolerance too low?

ACTION : Increase the setting value.

- **Heater terminal short circuit error [HSE] is displayed.**

CHECK : Is the nozzle cartridge for MODEL FM-2024?

ACTION : Turn the power switch OFF and insert the MODEL FM-2024 tip. Turn the power switch ON.

- **Solder cannot be removed.**

CHECK : Is the heat insufficient?

ACTION : Higher heat may be required for large projects. Perform soldering operation while preheating the work. Increasing the nozzle temperature indiscriminately can damage the work. Use an appropriate temperature.

CHECK : Is it difficult for solder to stay on the nozzle tip?

ACTION : See “Maintenance of nozzle” and “The nozzle end does not extract solder”.

- **Suction power is dropping.**

CHECK : Is oxide adhering to the nozzle or inside the suction pipe?

ACTION : See “Maintenance of nozzle” and “Cleaning the inside of suction pipe”.

CHECK : Is a piece of removed solder stuck in the filter pipe?

ACTION : If removed solder is clogging up 70 to 80 percent of the filter pipe, replace the filter pipe. Also replace the filter pipe after suctioning large amounts of flux or when the ceramic filter hardens.

CHECK : Is solder residue stuck between the front holder or back holder bushing and the contact surface of the filter pipe assembly?

ACTION : See “Check and clean the front and back holder bushings”.

CHECK : Has the ceramic paper filter deteriorated?

ACTION : The ceramic paper filter is full of flux, thereby reducing the suction power. See “Checking and replacing the ceramic paper filter”.

10. PARTS LIST

NOTE:
Spare or repair parts do not include mounting screws, if they are not listed on the description. Screws must be ordered separately.

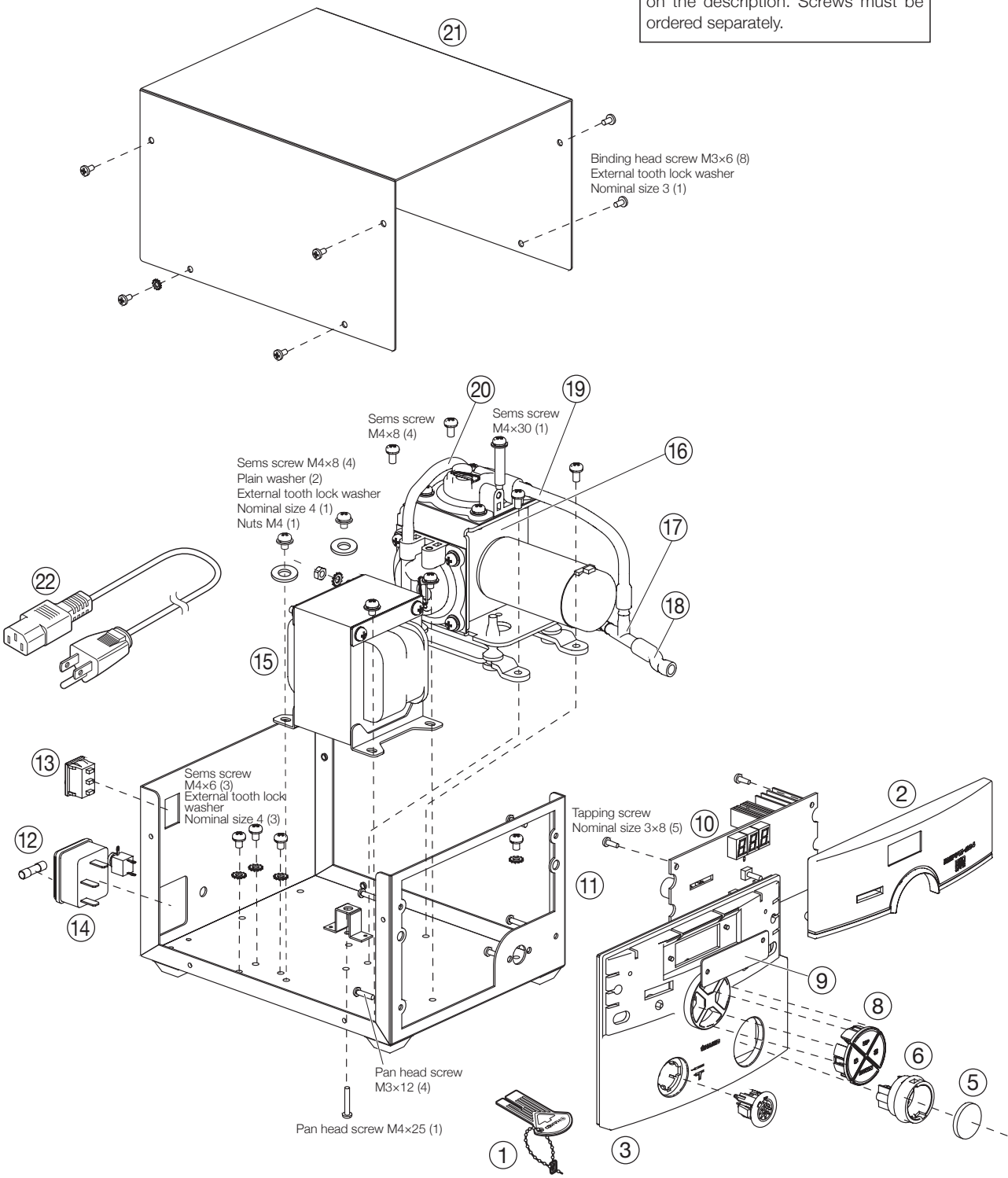

● Pump assembly

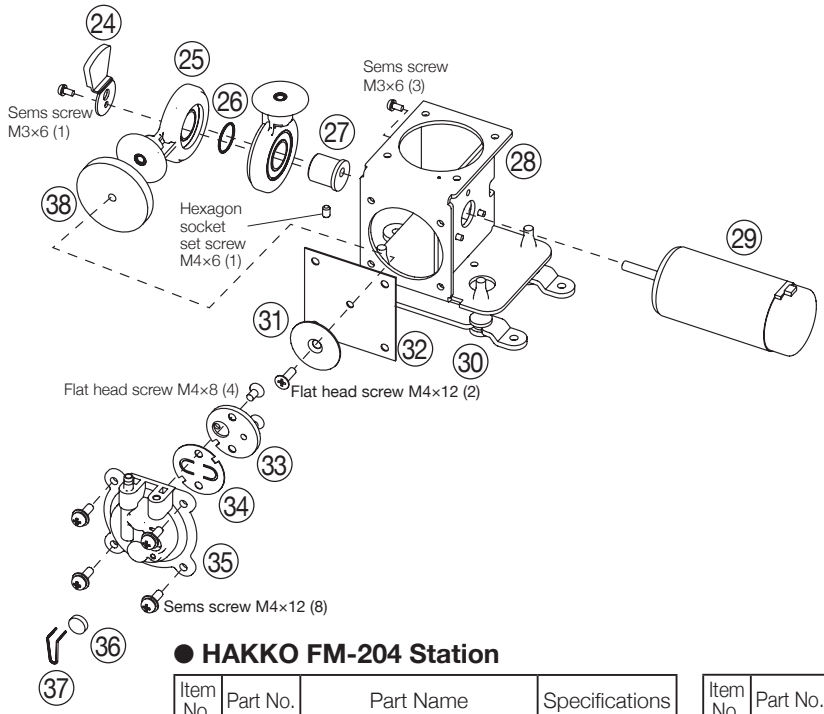

● HAKKO FM-204 Station

Item No.	Part No.	Part Name	Specifications
①	B2972	Card	
②	B3415	Front panel A	
③	B3416	Front panel B	
④	B2880	Vacuum outlet cap	With O-ring
⑤	A1613	Ceramic paper filter	10 pcs.
⑥	B3752	Filter case	
⑦	B2954	O-ring/Filter case cover	
⑧	B3419	Button set	4 pcs.
⑨	B3401	Display	
⑩	B3420	P.W.B	
⑪	B3432	Chassis	With rubber feet
⑫	B2761	Fuse/250V-3A	100-120V
	B2864	Fuse/250V-1.6A	220-240V
⑬	B2852	Switch	
⑭	B2384	Power receptacle	
⑮	B3421	Transformer/100V	
	B3422	Transformer/110V	
	B3423	Transformer/120V	
	B3424	Transformer/220V	
	B3425	Transformer/230V	
	B3426	Transformer/240V	
⑯	B3427	Pump assembly	
⑰	B3414	Inner hose joint	
⑱	B3433	Inner hose/8MM×45L	
⑲	B3434	Inner hose/6.5MM×120L	
⑳	B3435	Inner hose/6.5MM×280L	
㉑	B3431	Cover	

Item No.	Part No.	Part Name	Specifications
㉒	B2419	Power cord, 3 wired cord & American plug	
	B2421	Power cord, 3 wired cord but no plug	
	B2422	Power cord, 3 wired cord & BS plug	
	B2424	Power cord, 3 wired cord & European plug	220V KTL 230V CE
	B2425	Power cord, 3 wired cord & BS plug	230V CE
	B2426	Power cord, 3 wired cord & Australian plug	
	B2436	Power cord, 3 wired cord & Chinese plug	China
㉔	B1053	Balance weight	
㉕	B1312	Crank	
㉖	B1057	Ring for bearing	
㉗	B2060	Crank shaft	
㉘	B3429	Pump frame	
㉙	B3428	Motor	
㉚	B3430	Rubber vibration	
㉛	B2085	Diaphragm setting plate	
㉜	A1013	Diaphragm	(Set of 2)
㉝	B1056	Fixing plate	
㉞	A1014	Valve plate	(Set of 2)
㉟	B1050	Pump head	
㊱	B1059	Exhaust filter	(Set of 2)
㊲	B1313	Filter retaining pin	
㊳	B2506	Damper	(Set of 2)

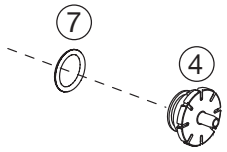

10. PARTS LIST (cont'd)

● Desoldering tool

Item No.	Part No.	Part Name	Specifications
① - ⑥, ⑧	FM2024-02	Desoldering tool	24V, 70W
①	A1512	Front holder	
②	A1612	Filter pipe assembly	Set of 10
③	A1513	Back holder bushing	
④	B2878	Back holder	
⑤	B2877	Hose	
⑥	B2879	Flange	
⑦		Nozzle	See parts list for nozzle.
⑧	B2872	Handle	For gun configuration
⑨	B2873	Cleaning drill	For heating element
⑩	B2876	Nozzle remover	

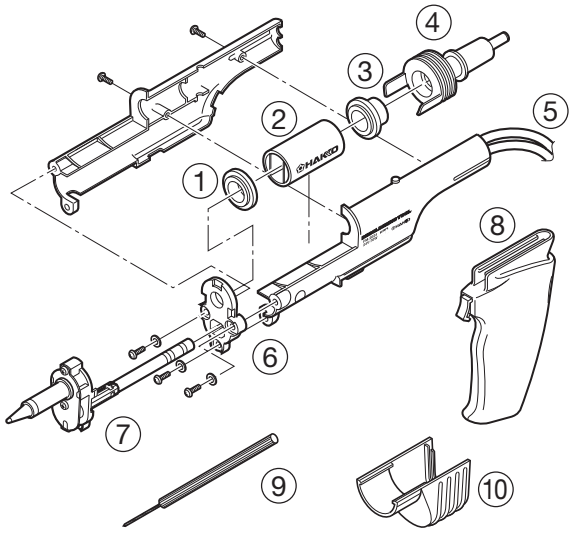

● Nozzle

Item No.	Part Name	øA	øB
N3-06	Nozzle 0.6 mm (0.02 in.)	0.6 mm (0.02 in.)	1.9 mm (0.07 in.)
N3-08	Nozzle 0.8 mm (0.03 in.)	0.8 mm (0.03 in.)	2.0 mm (0.08 in.)
N3-10	Nozzle 1.0 mm (0.04 in.)	1.0 mm (0.04 in.)	2.2 mm (0.09 in.)
N3-13	Nozzle 1.3 mm (0.05 in.)	1.3 mm (0.05 in.)	2.6 mm (0.10 in.)
N3-16	Nozzle 1.6 mm (0.06 in.)	1.6 mm (0.06 in.)	3.0 mm (0.12 in.)
N3-20	Nozzle 2.0 mm (0.08 in.)	2.0 mm (0.08 in.)	3.4 mm (0.13 in.)
N3-23	Nozzle 2.3 mm (0.09 in.)	2.3 mm (0.09 in.)	3.8 mm (0.15 in.)

Item No.	Part Name	øA	øB
N3-L10	Long nozzle 1.0 mm (0.04 in.)	1.0 mm (0.04 in.)	2.3 mm (0.09 in.)

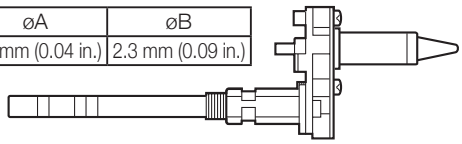

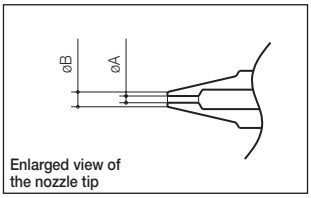

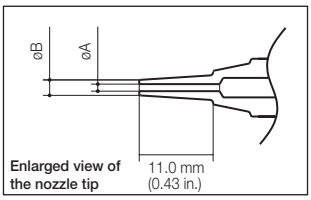

● Iron Holder

Item No.	Part No.	Part Name	Specifications
① - ⑦	FH200-05	HAKKO FH-200	With tip cleaner
①	B3251	Iron holder base	With rubber feet
②	B3249	Cleaner base	with rubber feet
③	599B-02	Tip cleaner	
④	599-029	Cleaning wire	
⑤	B3413	Iron holder	With screws
⑥	B3250	Stay	
⑦	B3252	Switch case assembly	
⑧	B3253	Connecting cable	
⑨	B2756	Tip tray	

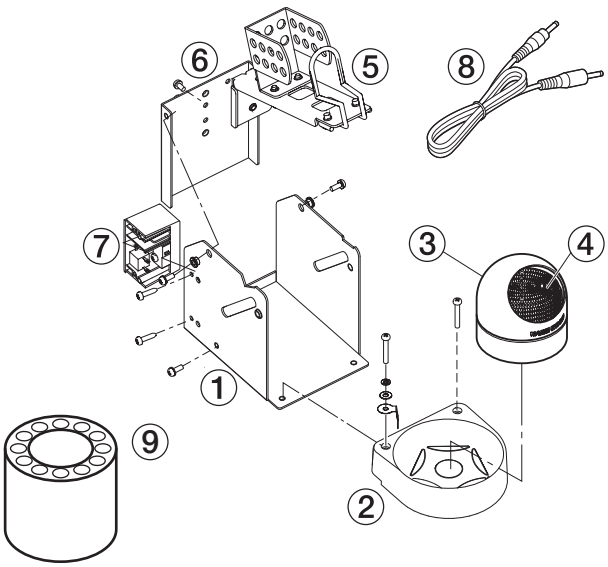

● Option

Part No.	Part Name	Specification
B3216	Sleeve assembly	Yellow
B3217	Sleeve assembly	Orange
B3218	Sleeve assembly	Blue
B3219	Sleeve assembly	Green
B3215	Connector cover	
B2874	Cleaning pin	For ø0.6mm (0.02 in.) nozzle
B1086	Cleaning pin	For ø0.8mm (0.03 in.) nozzle
B1087	Cleaning pin	For ø1.0mm (0.04 in.) nozzle
B1088	Cleaning pin	For ø1.3mm (0.05 in.) nozzle
B1089	Cleaning pin	For ø1.6mm (0.06 in.) nozzle
B2875	Cleaning pin	For ø2.0mm (0.08 in.)/ø2.3mm (0.09 in.) nozzle
FH200-01	Iron holder	With 599B
FH200-02	Iron holder	With cleaning sponge

FM2027-02	Connector assembly	
FM2027-03	Conversion kit	With 599B *1

FM2026-06	Conversion kit	*2

*1: With a sleep mode iron holder, connecting cable, heat resistant pad, 599B
*2: With a sleep mode iron holder, connecting cable, heat resistant pad, 599B
The FM-2026 must be used with the FX-780/FX-791.
* Please refer to brochure for tip variation of HAKKO FM-2027/FM-2026.

11. WIRING DIAGRAM

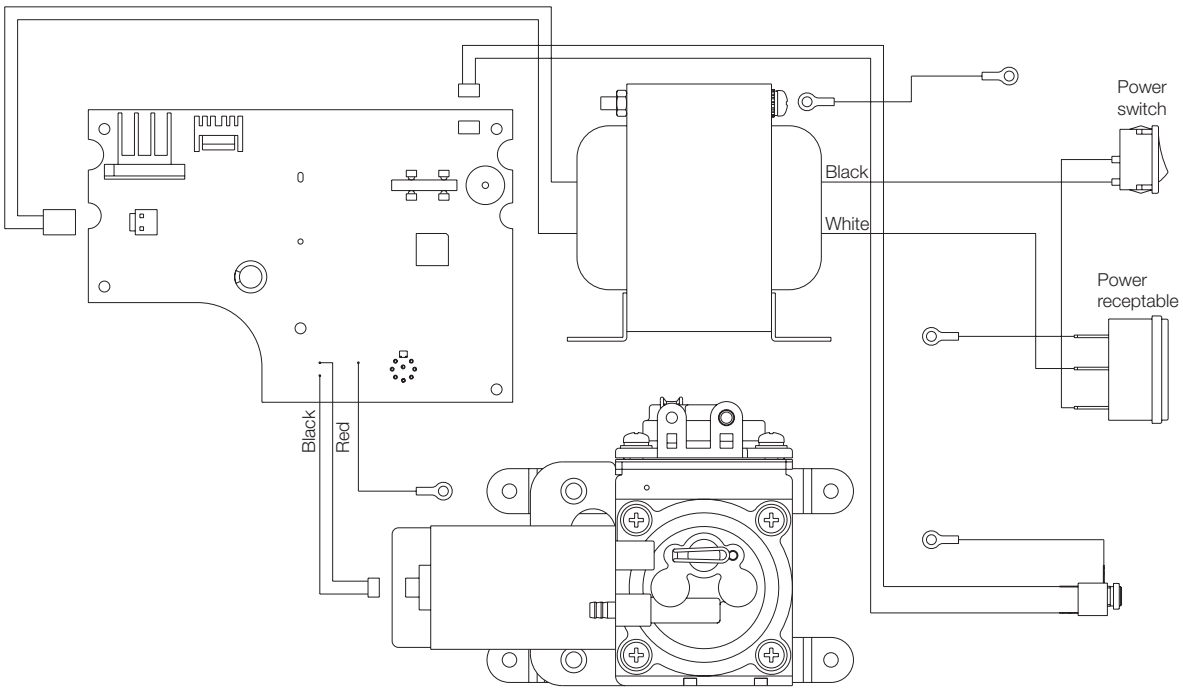

HAKKO CORPORATION

HEAD OFFICE

4-5, Shiokusa 2-chome, Naniwa-ku, Osaka 556-0024 JAPAN
TEL: +81-6-6561-3225 FAX: +81-6-6561-8466
https://www.hakko.com E-mail: sales@hakko.com

OVERSEAS AFFILIATES

U.S.A.: AMERICAN HAKKO PRODUCTS, INC.
TEL: (661) 294-0090 FAX: (661) 294-0096
Toll Free (800) 88-HAKKO
4 2 5 5 6
https://www.HakkoUSA.com E-mail: Support@HakkoUSA.com

HONG KONG: HAKKO DEVELOPMENT CO., LTD.
TEL: 2811-5588 FAX: 2590-0217
https://www.hakko.com.cn E-mail: info@hakko.com.hk

SINGAPORE: HAKKO PRODUCTS PTE., LTD.
TEL: 6748-2277 FAX: 6744-0033
https://www.hakko.com.sg E-mail: sales@hakko.com.sg

Please access the web address below for other distributors.

https://www.hakko.com

© 2007-2021 HAKKO Corporation. All Rights Reserved.

2021.6
MA01646XZ210625